Caloric

Electric Range Owner's Manual

Model CSR 3602 Coiltop Range

Please Read Manual Before Operating Range

- **Safety**
- **Installation**
- **Use**

Important
Save for local electrical inspector's use.

Installer
Leave this manual and other literature with consumer for future use.

Customer
Keep these instructions for future reference. If appliance changes ownership, be sure this manual accompanies range.

Contents

Important Safety Information 3
Installation 6
User Maintenance 11
Utensil Recommendations 12
Operating Surface Elements 13
Setting Clock and Timer 13
Adjusting Factory Set Baking Temperature 14
Baking and Broiling 14
Cooking Guide 16
Cleaning 18
Before Calling for Service 19
Warranty 20

Model Identification

Complete enclosed registration card and promptly return. If registration card is missing, call Consumer Affairs Department at 1-800-843-0304 inside U.S.A. 319-622-5511 outside U.S.A. When contacting Caloric Sales Co. L.P., provide product information located on rating plate. Rating plate is located on the oven frame. Record the following:

Model Number: _____
Manufacturing Number: _____
Serial or S/N Number: _____
Date of purchase: _____
Dealer's name and address: _____
_____
_____

Parts and Accessories

Purchase replacement parts and additional accessories (e.g., cooktop accessories, grates, cleaning products) over the phone. To order accessories for your Caloric Sales Co. L.P. product, call 1-800-843-0304 inside U.S.A. or 319-622-5511 outside U.S.A.

Service

Keep a copy of sales receipt for future reference or in case warranty service is required. Any questions or to locate an authorized servicer, call 1-800-NAT-LSVC (1-800-628-5782) inside U.S.A. 319-622-5511 outside U.S.A. Warranty service must be performed by an authorized servicer. Caloric also recommends contacting an authorized servicer if service is required after warranty expires.

Asure™ Extended Service Plan

Caloric Sales Co. L.P. offers long-term service protection for this new range. Asure™ Extended Service Plan is specially designed to supplement Caloric Sales' strong warranty. This plan covers parts, labor, and travel charges. Call 1-800-528-2682 for information.

What You Need to Know about Safety Instructions

Warning and Important Safety Instructions appearing in this manual are not meant to cover all possible conditions and situations that may occur. Common sense, caution, and care must be exercised when installing, maintaining, or operating range.

Always contact your dealer, distributor, service agent, or manufacturer about problems or conditions you do not understand.

Recognize Safety Symbols, Words, Labels

DANGER

DANGER—Immediate hazards which **WILL** result in severe personal injury or death.

WARNING

WARNING—Hazards or unsafe practices which **COULD** result in severe personal injury or death.

CAUTION

CAUTION—Hazards or unsafe practices which **COULD** result in minor personal injury or product or property damage.

IMPORTANT SAFETY INFORMATION

⚠ WARNING

To avoid risk of the appliance tipping, it must be secured by a properly installed anti-tip bracket(s). To make sure bracket has been installed properly, remove the storage drawer or panel and look under the range with a flashlight. Bracket(s) must be engaged in the rear corner of the range.

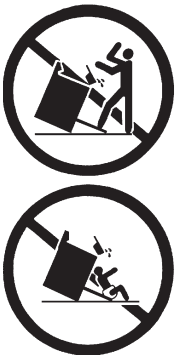

- ALL RANGES CAN TIP
- INJURY TO PERSONS COULD RESULT
- INSTALL ANTI-TIP BRACKET(S) PACKED WITH RANGE
- SEE INSTALLATION INSTRUCTIONS

⚠ CAUTION

DO NOT TOUCH SURFACE UNITS OR AREAS NEAR UNITS—Surface units may be hot though they are dark in color. Areas near surface units may become hot enough to cause burns. During and after use, do not touch, or let clothing touch or other flammable materials contact surface units or areas near surface units until they have had enough time to cool. These areas include the rangetop and backguard.

⚠ CAUTION

DO NOT TOUCH HEATING ELEMENTS OR INTERIOR SURFACES OF OVEN—Oven heating elements may be hot though they are dark in color. Interior surfaces of an oven may become hot enough to cause burns. During and after use, do not touch, or let clothing or other flammable materials touch heating elements or interior surfaces of oven until they have had enough time to cool. Other range surfaces that may become hot enough to cause burns are the oven door and oven vent.

⚠ WARNING

To avoid personal injury, do not sit, stand or lean on oven door or oven drawer.

⚠ WARNING

To avoid risk of electrical shock, personal injury, or death, make sure your range has been properly grounded and always disconnect it from main power supply before servicing.

California Safe Drinking Water and Toxic Enforcement Act (Proposition 65)

The Governor of California is required to publish a list of substances known to the state of California to cause cancer or reproductive harm and requires businesses to warn customers of potential exposures to such substances.

Some appliances contain or produce a chemical or chemicals which can cause death or serious illness and which are known to the State of California to cause cancer, birth defects, or other reproductive harm. To reduce the risk from substances that may be released during the self-cleaning cycle, make sure this appliance is installed, operated, and maintained according to the manufacturer's instructions.

SAVE THESE INSTRUCTIONS

IMPORTANT SAFETY INFORMATION

ALL APPLIANCES

1. Proper Installation—Be sure your appliance is properly installed and grounded by a qualified technician.
2. Never Use Your Appliance for Warming or Heating the Room.
3. Do Not Leave Children Alone—Children should not be alone or unattended in the area where the appliance is in use. They should never be allowed to sit or stand on any part of the appliance.
4. Wear Proper Apparel—Loose-fitting or hanging garments should never be worn while using the appliance.
5. User Servicing—Do not repair or replace any part of the appliance unless specifically recommended in the manual. All other servicing should be referred to a qualified technician.
6. Storage In or On Appliance—Flammable materials should not be stored in an oven or near surface units.
7. Do Not Use Water on Grease Fires—Smother fire or flame, or use dry chemical or foam-type extinguisher.
8. Use Only Dry Potholders—Moist or damp potholders on hot surfaces may result in burns from steam. Do not let potholder touch elements. Do not use a towel or other bulky cloth.

SURFACE COOKING UNITS

1. Use Proper Pan Size—This appliance is equipped with one or more surface units of different size. Select utensils having flat bottoms large enough to cover the surface unit heating element. The use of undersized utensils will expose a portion of the heating area to direct contact and may result in ignition of clothing. Use of oversized utensils concentrates heat on cooking surface and can cause damage to range. Proper relationship of utensil to surface element improves efficiency.
2. Never Leave Surface Units Unattended—Boilover causes smoking and greasy spillovers that may ignite.
3. Make Sure Reflector Pans or Drip Bowls Are in Place—Absence of these pans or bowls during cooking may subject wiring or components underneath to damage.
4. Protective Liners—Do not use aluminum foil to line surface unit drip bowls or oven bottom. Improper installation of these liners may result in a risk of electrical shock, or fire.
5. Glazed Cooking Utensils—Only certain types of glass, ceramic, earthware, or other glazed utensils are suitable for rangetop service without breaking due to sudden change in temperature.
6. Utensil Handles Should Be Turned Inward and Not Extend Over Adjacent Surface Units—To reduce the risk of burns, ignition of flammable materials, and spillage due to unintentional contact with the utensil, the handle of a utensil should be positioned so that it is turned inward, and does not extend over adjacent surface units.
7. Do Not Soak Removable Heating Elements—Heating elements should never be immersed in water.

SAVE THESE INSTRUCTIONS

IMPORTANT SAFETY INFORMATION

OVENS

1. Use Care When Opening Door—Let hot air or steam escape before removing or replacing food.
2. Do Not Heat Unopened Food Containers—Build-up of pressure may cause container to burst and result in injury.
3. Keep Oven Vent Ducts Unobstructed.
4. Placement of Oven Racks—Always place oven racks in desired location while oven is cool. If rack is removed while oven is hot, do not let potholder contact hot heating element in oven.

VENTILATION HOODS

1. Clean Ventilating Hoods Frequently—Grease should not be allowed to accumulate on hood or filter.
2. When flaming foods under the hood, turn the fan on.

In Case of Fire

Fires can occur as a result of over cooking or excessive grease. Though a fire is unlikely, if one occurs, proceed as follows:

Surface Element Fire

1. Smother the fire with a nonflammable lid or baking soda, or use a Class ABC or BC extinguisher. Not water. Not salt. Not flour.
2. As soon as it is safe to do so, turn the surface controls to *OFF*. Turn off power at main circuit breaker or fuse box.

Oven Fires

1. If you see smoke from your oven, do not open oven.
2. Turn oven control to *OFF*.
3. As an added precaution, turn off power at main circuit breaker or fuse box.
4. Turn on vent to remove smoke.
5. Allow food or grease to burn itself out in oven.
6. If smoke and fire persist, call fire department.
7. If there is any damage to components, call an authorized servicer before using range.

Precautions

- Do not cook food directly on rangetop surface, always use cookware.
- Do not mix household cleaning products. Chemical mixtures may interact with objectionable or even hazardous results.
- Oven door contains a glass window. While this glass is built to be sturdy and resistant, it is glass and should be treated with care.
- Do not lift or move range by grasping oven door. This can result in glass window breaking or shattering.
- Do not put plastic items on warm cooking areas. They may melt and stick.
- Do not slide rough metal objects across rangetop surface. Scratching or metal marking can result.
- Do not leave fat heating unless you remain nearby. Fat can ignite if overheated by spilling onto hot surfaces.
- Do not allow pots to boil dry as this can cause damage to cooking surface and pan.
- Do not use rangetop surface as a cutting board.
- Do not use range for storage or as a display counter.

SAVE THESE INSTRUCTIONS

Packing Material

Remove protective packing materials from range. Tape residue can be cleaned with a soft cloth and alcohol.

Range Location

Underwriter's Laboratories, Inc. specifies range can be installed flush against right and left base cabinets, and rear vertical wall. Range can also be installed flush against left or right vertical wall extending above 36 inch standard countertop height.

Cabinet Opening

⚠ WARNING

To avoid risk of burns or fire by reaching over elements, cabinet storage space located above range should be avoided. If cabinet storage is provided, install a range hood that projects horizontally a minimum of 5 inches beyond the cabinet bottom to reduce the risk.

⚠ CAUTION

Do not store items of interest to children in cabinets above a range or behind the backguard of a range. Children climbing on the range to reach items could be seriously injured.

Range should extend approximately 2 inches from cabinet front to oven door handle. Using dimensions, prepare cabinet opening.

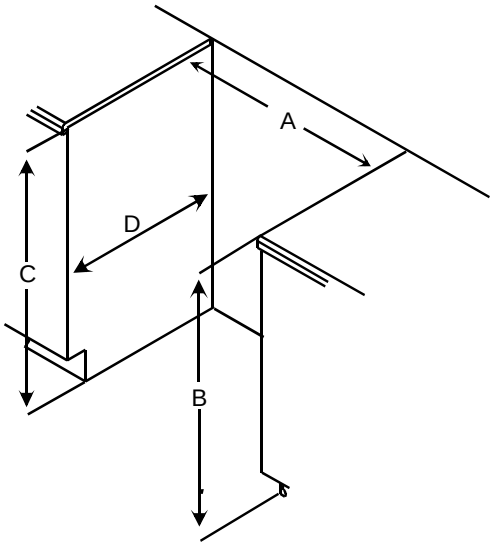

A—30 1/8 to 30¼ inches
B—36 inches standard
C—35 inches standard
D—24 inches standard

Standard Cabinet and Countertop Height

Minimum Clearances to Combustible Surfaces

Using dimensions, prepare cabinet opening.

- Minimum clearance to rear wall is 0 inches.
- Minimum clearance to a vertical right or left side wall is 0 inches.
- Minimum clearance to countertop/cabinet on each side is 0 inches.
- Minimum of 30 inches between top of cooking surface and bottom of an unprotected wood or metal cabinet.
- Minimum of 24 inches between cooking surface and protected wood or metal cabinet above range. Cabinet bottom must be protected by at least ¼ inch thick millboard with not less than No. 28 MSG sheet steel, .015 inch thick stainless steel, .024 inch thick aluminum, or .020 inch thick copper.

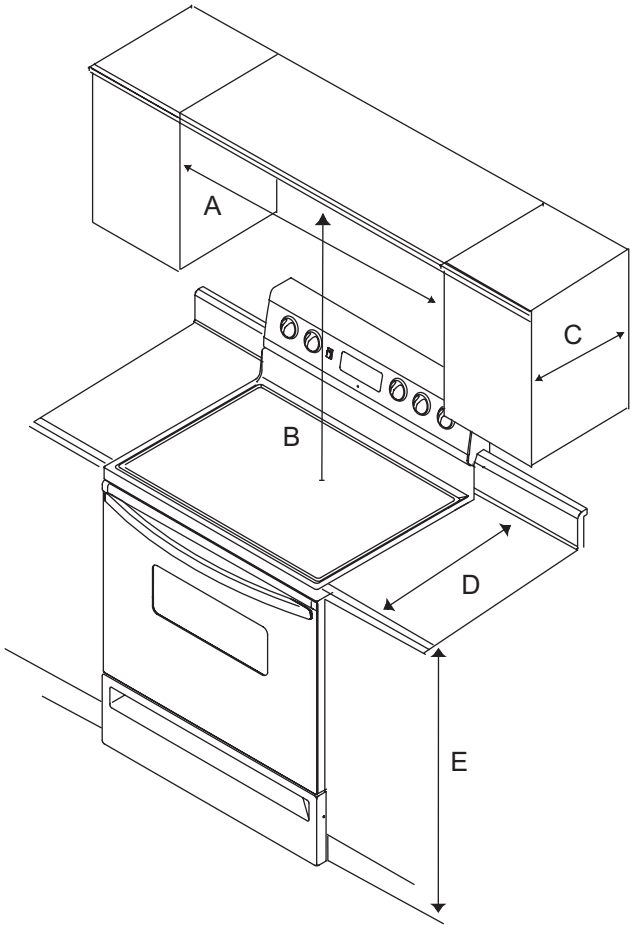

A—30 inches minimum
B—30 inches unprotected / 24 inches protected minimum
C—13 inches maximum
D—25 inches maximum
E—36 inches maximum

Minimum Clearances to Combustible Surfaces

Irregular Cabinet and Countertop Heights

Countertops such as ceramic tile tops cause cabinet and countertop to be higher than 36 inches. Follow instructions below when countertop is higher than 36 inches.

1. Raise leveling legs to maximum height.
2. Measure from floor to rangetop. If measurement is less than height of countertop, floor must be shimmed.
3. Shim floor using a piece of plywood same size as range opening. Secure plywood to floor. Plywood must be as secure as original flooring.
4. Install anti-tip bracket and slide range into place.

Line Voltage Requirements

Line voltage must not exceed rated voltage. See rating plate attached to range for kilowatt rating. Line voltage less than rated voltage will result in slow heating. Wiring system must conform to Underwriters Laboratories, Inc. standards and National Electrical Code. Installation must conform to all local, municipal and state building codes, and local utility regulations. Range must be connected only to a supply circuit as specified on rating plate wiring diagram of range.

This range requires 3 wires, 120/240 VAC, 40 Amp minimum, 60 Hertz, single phase electrical supply (refer to rating label). Wiring system and grounding must conform with the latest edition of Underwriters Laboratories, Inc. Standards, the National Electric Code, ANSI/NFPA 70, or the Canadian Electrical Code, CAS C22.1. Installation must conform to all local, municipal and state building codes, and local utility regulations. Connect range to power supply with MAXIMUM RATED VOLTAGE listed on the ratingplate. Line voltage must not exceed rated voltage.

Power Supply Location

Shaded area shows range clearance for electrical connection.

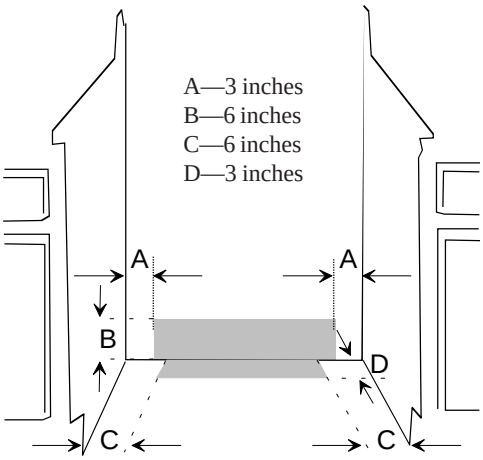

Power Supply Location

Power Cord Requirements

Power cord is not supplied with range. Power cord must be U.L. Listed and meet NEC and Mobile Home Manufacturers Association Standards. Cord must be rated at a minimum 250V 40 AMP, equipped with a plug configuration in accordance with NEMA. Conductors must end with closed loop (ring) terminals at the range.

- Three-conductor cord plug NEMA 10-50P allowed for residential.
- Four-conductor cord plug NEMA 14-50P required for most mobile home installations but can be used for residential.

NOTE: Only a power cord suitable for use with ranges may be used. For installation in a mobile home, or area where local codes do not permit grounding through the neutral terminal, a 4-wire cord must be used.

Range Terminal Block

Connection block is located at bottom rear of range behind rear cover panel. Remove rear cover screw. Directly below terminal block is a hole for a power supply service cord. Power cord is not supplied with range.

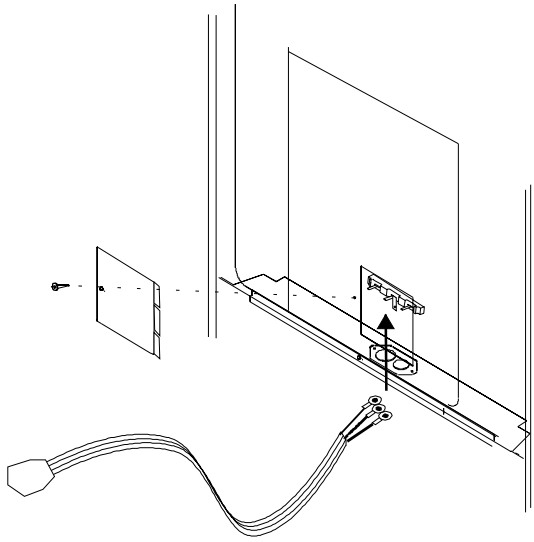

Installing Power Cord

Range has been grounded at the factory to the center (nickel plated) terminal of the terminal block in accordance with the National Electrical Code (section 2560). When a separate ground is required by local code, disconnect the grounding strap from the terminal block. Ground frame by connecting a grounding wire to range frame using **only** the grounding screw removed from the grounding strap.

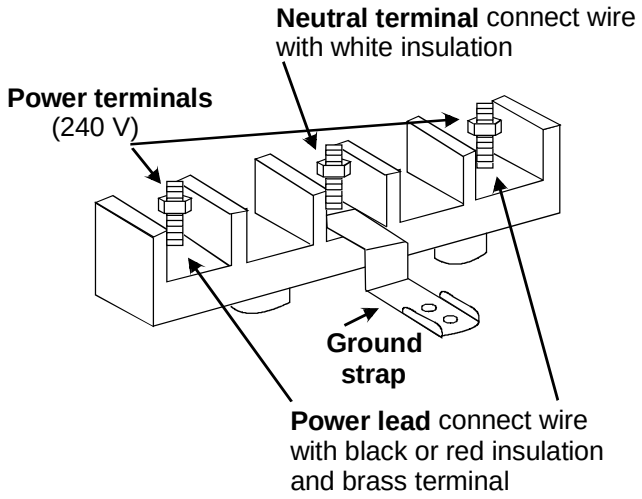

Range Terminal Block

Terminal block is approved for copper wire connection only, NOT aluminum wiring. If aluminum house wiring is to be connected, the following procedure is suggested.

1. Connect length of copper building wire to range terminal block with ring terminals.
2. Splice copper wires to aluminum wiring using connectors which are design certified by Underwriter's Laboratories and recognized for joining copper to aluminum. Follow the connector manufacturer's recommended procedure.
3. Wire used, location and enclosure of splices must conform to local codes.

Installing 3-Wire Power Cord

Refer to power cord instructions if available for additional information.

1. Remove wire cover on rear of range.
2. Place strain relief (winged clamp) in cord access hole below terminal block.
   - Strain relief is supplied with cord. Place wings through hole, entering from bottom. Screw holes in clamp should be below mounting panel. Place cord through strain relief.
3. Attach neutral (center) or white wire to center terminal on terminal block.
4. Attach power lead, red wire or black wire, to left side power terminal.
5. Attach power lead, red wire or black wire, to the right side power terminal.
6. After wires have been placed on terminals, attach with hex nuts provided.
   - Firmly tighten to ensure proper electrical connection.
7. Place screw through strain relief and tighten.
8. Replace rear wire cover.

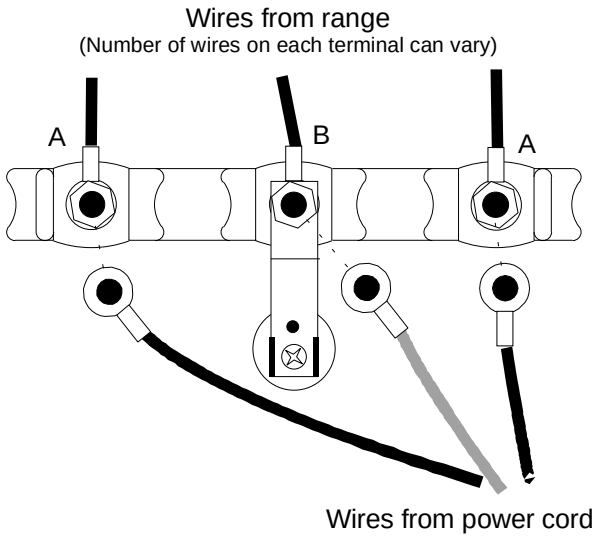

A— Power lead terminal (Connect black or red insulated wire and secure with brass nut.)

B— Neutral terminal (Connect insulated white insulated wire and secure with brass nut.)

3-Wire Power Cord

Installing 4-Wire Power Cord

⚠ WARNING

To avoid the risk of severe electrical shock or death, ground wire must be attached to frame of range, using ground screw provided. Ground wire must not contact any other terminal.

1. Remove rear wire cover on back of range.
2. Place strain relief (winged clamp) in cord access hole below terminal block.
   - Strain relief is supplied with cord. Place wings through hole entering from bottom.
   - Screw holes in clamp should be below mounting panel.
3. Remove green ground screw (retain for use in step 8) and unscrew brass nut on center terminal. Remove grounding strap.

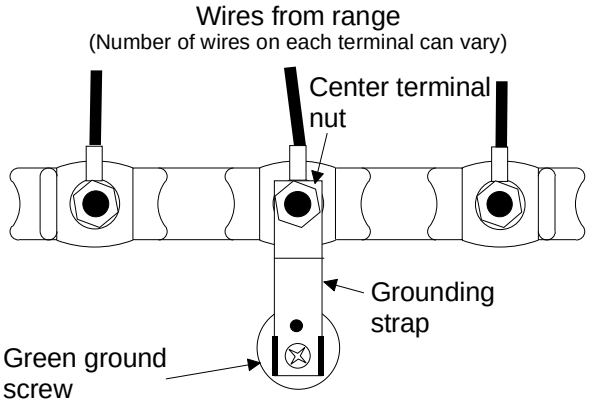

Terminal Block Grounding Strap, Screw and Center Nut

4. Place cord through strain relief.
5. Attach cord neutral (center) or white wire to center terminal on terminal block. Secure with hex nuts provided.
6. Attach power lead, red wire or black wire to left terminal. Secure with hex nuts provided.
7. Attach power lead, red wire or black wire to right terminal. Secure with hex nuts provided.

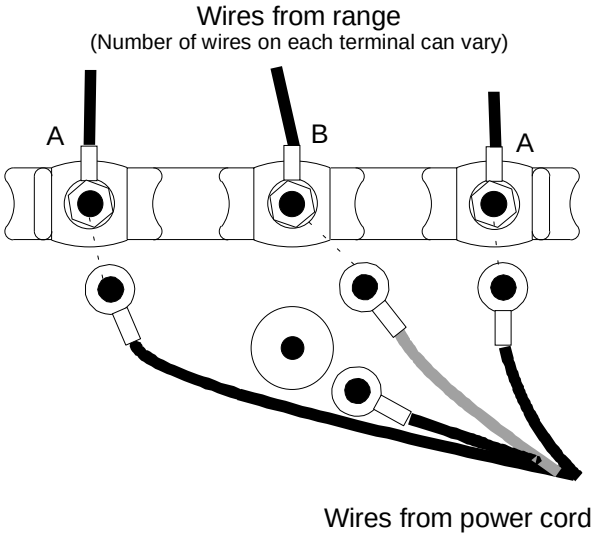

A— Power lead terminal (Connect black or red insulated wire and secure with brass nut.)
B— Neutral terminal (Connect insulated white insulated wire and secure with brass nut.)

Installing 4-Wire Power Cord

8. Position grounding strap down and away from terminal block. Attach green or bare wire and grounding strap to back of range using green ground screw previously removed in step 3.

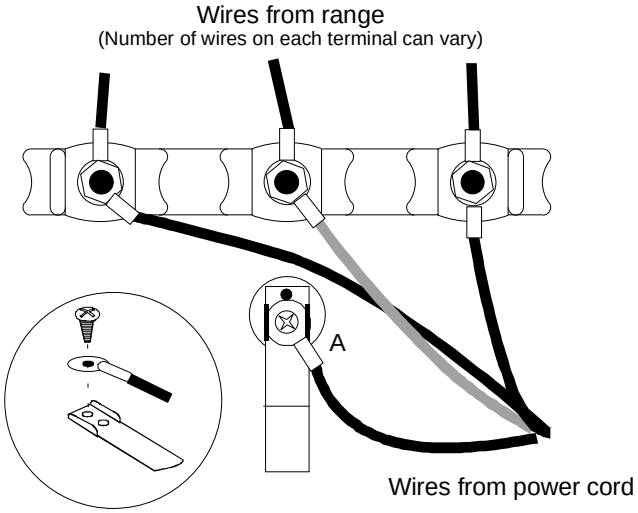

A— Ground screw (Connect green insulated wire and secure with screw.)

Position Grounding Strap

9. Firmly tighten all connections to ensure proper electrical connection.
10. Place screw through strain relief, tighten, and replace rear wire cover.

Converting 3-Wire to 4-Wire Power Cord

1. Remove rear wire cover.
2. Remove bottom strain relief screw and retain for further use.
3. Remove screw/hex nuts from terminal block and retain for further use.
4. Remove all 3-wire or cable leads from the terminal block and proceed to remove the power cord from the range by pulling in a downward motion so the cord is removed from strain relief.
5. To install the 4-wire cord, please follow step 3 through step 9 of *Installing 4-Wire Power Cord* section.

Anti-tip Bracket Installation

To reduce risk of range tipping, secure range with a properly installed anti-tip bracket.

1. Measure 3 1/2 inches from back wall on right and left side of cabinet cutout. Mark measurements on floor and draw a straight line connecting marks.
2. Position anti-tip bracket.
   - If range is installed beside cabinet(s), place anti-tip bracket with back edge on line drawn on floor and side of bracket against cabinet.
   - If range is not installed beside cabinet(s), position range where it will be installed. Draw a line along side of range on floor from front to back. Remove range. Place anti-tip bracket with back edge over line drawn 3 1/2 inches from back wall and side of bracket over line drawn along side of range on floor.
   - Anti-tip bracket can be installed on either right or left side.

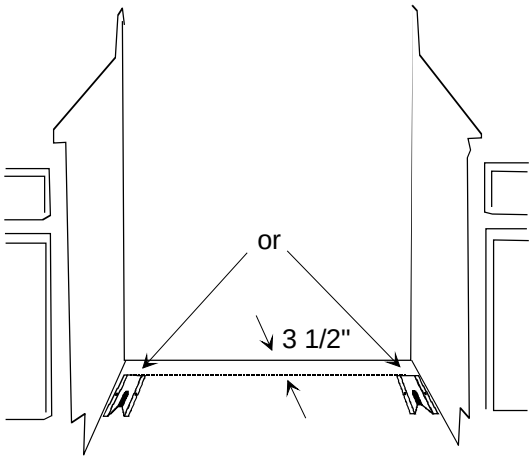

Anti-tip Bracket Installation

3. Mark 2 hole locations in anti-tip bracket.
4. Drill 2 holes.
   - If drilling into wood, use a 3/32-inch drill bit.
   - If drilling into concrete, use a 3/16-inch masonry drill bit and insert plastic anchors.
5. Secure bracket to floor using screws supplied. Slide range into position.
6. Remove range storage drawer or lower panel and confirm anti-tip bracket is engaged with range leveling leg after sliding range into position.

Place and Level Range

⚠ CAUTION

To avoid damaging oven door, do not lift or move range by oven door handle. Glass can break.

1. Carefully level range using legs provided. Range must be level to cook and bake uniformly.
   - Place a level on top oven rack or on range top when leveling.
   - Leveling legs must extended at least ¼ inch to engage anti-tip bracket.
2. Plug in range cord.
3. Slide range into position
4. Remove range storage drawer or lower panel and confirm anti-tip bracket is engaged with range leveling leg after sliding range into position.

Removal and Reinstallation of Range

1. Disconnect power to range.
2. Slide range forward.
3. Unplug range cord and place range aside.
4. Remove anti-tip bracket.
5. Install anti-tip bracket into new location using instructions provided with bracket or see *Anti-tip Bracket Installation* section in this manual.
6. To reinstall range, follow instructions in *Installation* section of this manual.

Removing Oven Door

CAUTION

To avoid personal injury or property damage, handle oven door with care.

- **Do not lift door by handle.**
- Door is heavy and can be damaged if dropped.
- Avoid placing hands in hinge area when door is removed. Hinge can snap closed and pinch hands.
- Do not scratch or chip glass, or twist door. Glass may break suddenly.
- Replace door glass if damaged.

1. Open door fully.
2. Remove screws.
   - Oven doors are attached with a screw on each side of lower oven door.
3. Close door to first stop, grasp door firmly on each side, and lift upward until door is off hinges.
   - Do not lift door by handle. Glass can break.
   - Only push hinges closed after oven door is removed if necessary. Use both hands when closing hinge. Hinge snaps closed.

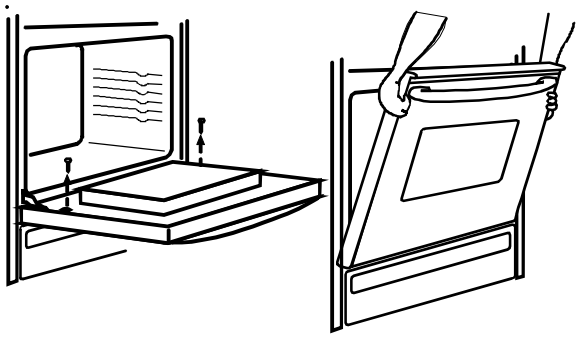

Removing Oven Door

Removing Storage Drawer (Some Models)

1. Slide drawer out until it stops.
2. Grasp drawer sides near back.
3. Lift up and out. Reverse to reinstall.

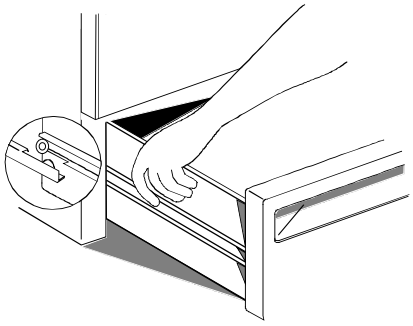

Removing Storage Drawer

Replacing Oven Light

WARNING

To avoid risk of burns or electrical shock, disconnect electrical supply to oven before changing light bulb.

- Wear gloves to protect hands from accidental bulb breakage
- Before replacing light bulb make sure bulb is cool.
- Do not operate oven without bulb and cover in place.

1. Disconnect electrical supply.
2. Remove oven door if desired.
3. Unscrew light bulb cover located in rear of oven cavity. Then turn light bulb counterclockwise to remove.
4. Replace light bulb with 120-volt, 40-watt appliance bulb.
   - Do not overtighten bulb or it may be difficult to remove later.
5. Replace light bulb cover and oven door before use.
6. Reconnect power supply.

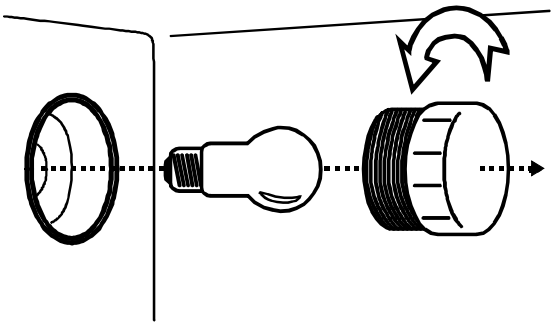

Removing Oven Light Bulb

Utensil Recommendations

Cooking Utensils

- Use proper pan size. Do not use a pan that has a bottom smaller than element. Do not use utensils that overhang element by more than 1 inch.

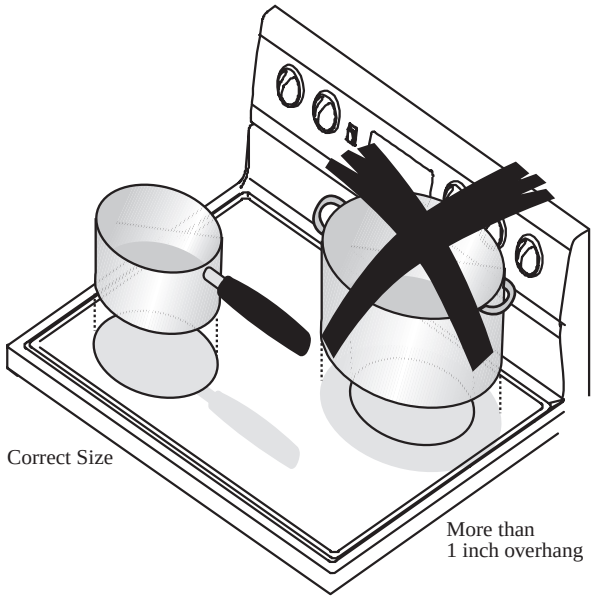

Use Proper Pan Size

- Select utensils without broken or loose handles. Handles should not be heavy enough to tilt pan.
- Do not use a wok with a ring stand. Use flat bottom wok.

Use Flat Wok

Canning

Caloric manufactures a special canning element that enables canning without causing damage to the range.

In many types of ranges, heat generated by canning cookware overheats a regular element and can cause failure of the heating element and possible damage to the backguard. This hazard can be prevented by using the canning element.

To purchase a specialized canning element, contact Caloric Consumer Affairs at (800) 843-0304 inside U.S.A.

Utensil Material Characteristic		
Type	**Temperature Response**	**Uses**
Aluminum	Heats quickly	Frying, braising, roasting
Copper Clad / Tin Lined	Heats and cools quickly	Gourmet cooking, wine sauces, egg dishes
Stainless Steel	Heats and cools at moderate rate	Soups, sauces, vegetables, general
Cast Iron	Heats and cools slowly	Low heat cooking and frying
Enamelware	Varies with metal base	Low heat cooking
Ceramic (Glass)	Heats and cools slowly	Low heat cooking

For best cooking results, use a pan with a flat bottom. Determine if pan has a flat bottom.

1. Rotate a ruler along bottom of pan. If pan is not flat, gaps between bottom of pan and edge of ruler occur.
2. A small groove or mark on a pan does not affect cooking times. However, if a pan has a gap, formed rings, or an uneven bottom, it does not cook efficiently and in some cases may not boil liquid.

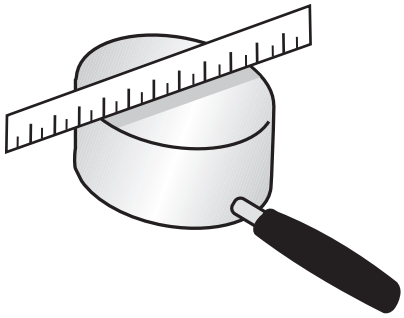

Use Flat Bottom Pans

Operating Surface Elements

WARNING

To avoid risk of serious personal injury, property damage, or fire, do not leave surface elements unattended while in operation. Grease and spillovers can ignite causing a fire.

1. Push in and turn surface element control to desired setting.
   - Some ranges have two indicator lights, one for elements on right side and one for elements on left side of range. When either front or rear element is on, corresponding indicator light glows.
   - Some ranges have one indicator under clock. When any element is on, indicator light glows.
   - Coiltop ranges can have one indicator light. The indicator light will turn on when the surface element control knob is turned from the *OFF* position. The light will continue to glow during element use, and will shut off when the control knob is turned to the *OFF* position.
   - Element will cycle on and off to maintain desired heat setting.
2. When finished cooking, turn control to *OFF* position.

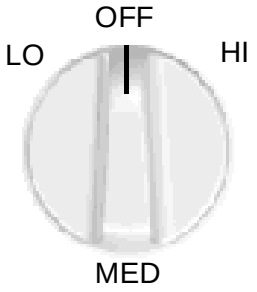

Surface Element Control Knob

Surface Element Settings

LO—Use to prepare food at less than boiling temperatures or to simmer.

MED—Use to maintain boiling of larger amounts of food, low temperature frying and to maintain correct pressure in a pressure cooker.

HI—Use to bring food to boiling temperatures. When food is boiling temperature setting should be reduced to LO through MED.

Setting Clock and Timer

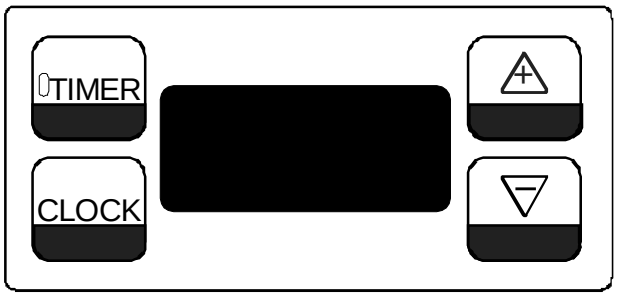

Setting Electronic Clock

1. Press CLOCK pad.
2. Press up or down arrow pad until correct minutes display.
3. Press CLOCK pad to set time of day.

Setting Electronic Timer

Electronic timer does not control bake or broil. Timer can be set up to 12 hours. Time displays and counts down in hours and minutes when more than 59 minutes are entered. For example, 1:30 equals one hour and thirty minutes, or 90 minutes total.

1. Press TIMER pad.
   - 0:00 displays
2. Press up or down arrow pad to set time
   - Press an arrow pad once to advance 1 minute at a time, or press and hold arrow pad to advance in increments of 10 minutes.
   - If desired time is more than 1 hour press and hold up arrow pad until desired time displays.
3. Colon in display flashes and the timer begins counting down automatically after time is entered.
4. Timer beeps once when remaining time is 1 minute.
5. After time elapses, timer beeps 3 times, and then once every 10 seconds until TIMER pad is pressed.
   - Display returns to time of day after TIMER pad is pressed.

Canceling Electronic Timer

- Press TIMER pad to cancel timer.

Adjusting Factory Set Baking Temperature

Oven temperature is set at factory. When first using oven, follow recipe times and temperatures. If you think oven is too hot or too cool, temperature can be adjusted. Before adjusting oven baking temperature, test a recipe by using a temperature set higher or lower than the recommended temperature. The baking results should help you to decide how much adjustment is needed.

1. Pull oven thermostat knob straight out from control panel.
2. Turn knob over and loosen screws using Phillips screwdriver.
   - Do not remove screws.
3. While holding knob front, turn outer part of knob until pointer points to next line.
   - Turn outer knob clockwise to decrease or counterclockwise to increase temperature.
   - Each line adjusts temperature approximately 10 degrees Fahrenheit.
   - Only move knob one line at a time.
4. Tighten screws with pointer in new position and replace knob on control panel.
   - Use oven with known recipe before moving pointer again.

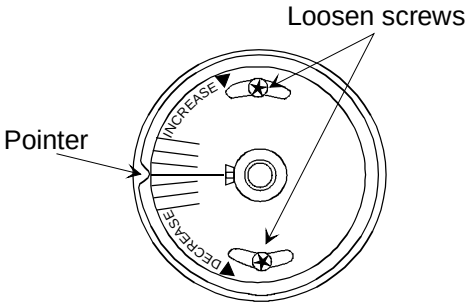

Temperature Knob Back

Remove Items Stored in Oven

Remove any pans and other cooking utensils stored in oven.

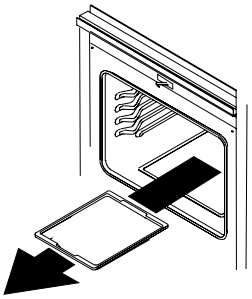

Remove Items Stored in Oven

⚠ WARNING

To avoid damaging oven liner or creating fire, do not line oven bottom or oven racks with foil or aluminum liners.

Oven Rack Placement

Position oven rack before turning oven on.

1. Pull rack forward to stop position.
2. Raise front edge of rack and pull until rack is out of oven.
3. Place rack in new rack position.
   - Curved edge of rack must be toward rear of oven.

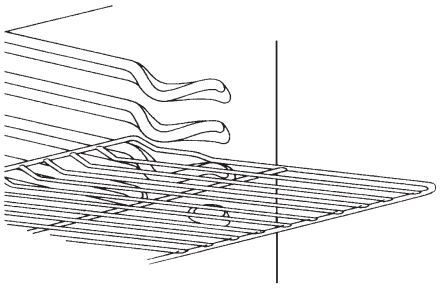

Oven Rack Placement

Pan Placement

- Keep pans and baking sheets 2 inches from oven walls.
- Stagger pans placed on different racks so one is not directly over the other.

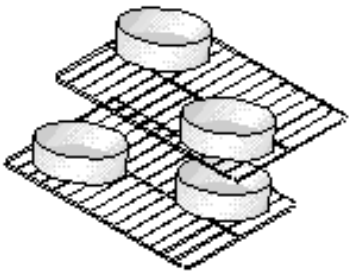

Pan Placement

Baking

Preheat approximately 15-20 minutes before placing delicate foods such as light cakes and muffins inside oven.

1. Open oven door to confirm nothing is stored in oven cavity and set racks to proper height.
2. To preheat oven, turn oven temperature knob to desired temperature.
   - Oven indicator light shuts off when oven reaches desired temperature.
   - Oven light will continue to turn on and off as oven cycles to maintain proper baking temperature.
3. Place food in oven.
4. After cooking time elapses, remove food and turn oven temperature knob to *OFF*.

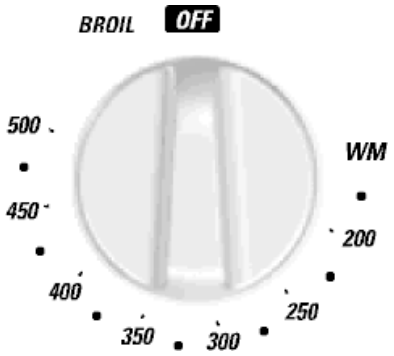

Temperature Knob

Aluminum Foil

When placed on the oven bottom or racks, aluminum foil not only creates a hazard, but also affects cooking performance. To minimize spills in the oven, place a shallow pan or cookie sheet underneath food items that may drip or spill. The pan or cookie sheet must not touch the oven walls, door, or back.

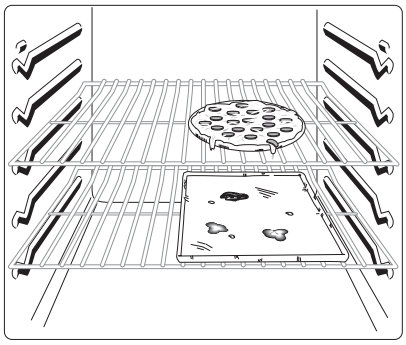

WARNING

To avoid risk of fire, do not line the broiler grid or oven bottom with foil.

- Foil may trap grease on top of grid close to burner causing a fire.
- Never leave oven unattended while broiling.
- Overcooking may result in a fire.

Broiling Tips

- Remove excess fat from meat before broiling. Cut edges of meat to prevent curling.
- Place food on a cold ungreased broiling pan. If pan is hot, food sticks.
- All food except fish should be turned at least one time. Begin broiling with skin side down.
- Season meat after it has browned.
- Broiling does not require preheating.
- Begin cooking using suggested rack levels in *Broiling Guide* section to test broiler results. If food is not brown enough, cook on a higher rack position. If food is too brown, cook on a lower rack position.

1. Center food on broiling grid and pan, and place in oven.
   - Open oven door to first stop when broiling.

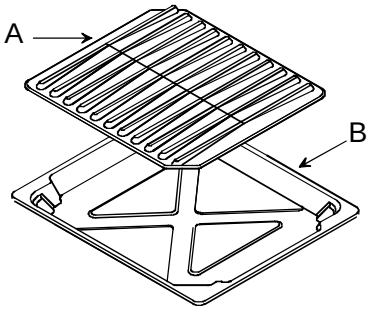

A—Broiler Grid
B—Broiler Pan

Broiler Pan and Grid

2. Turn oven temperature knob to *BROIL*.
   - Oven indicator light glows.
3. After broiling, remove food and turn oven temperature knob to *OFF*.

Cooking Guide

Baking Guidelines

Follow these recommendations only as a guide for times and temperatures. Times, rack position, and temperatures may vary depending on conditions and food type. For best results, always check food at minimum time.

Food	**Oven Temperature** (°Fahrenheit)	**Cooking Time** (Minutes)
Angel Food Cake	350	28–50
Biscuits	350–375	8–16
Muffins	375–400	17–23
Cookies	325–350	7–18
Cupcakes	325–375	15–20
Brownies	325–350	25–35
Layer Cakes	325–350	20–30
Pound Cake	325	40–60
Fresh Pies	375–425	35–50
Nut Bread	350	45–55

Poultry Roasting Guidelines

Follow these recommendations only as a guide for times and temperatures. Times, rack position, and temperatures may vary depending on conditions and food type. For best results, always check food at minimum time.

Food	**Oven temperature** (°Fahrenheit)	**Cooking time** (Hours)
Whole Chicken (4 lbs to 5 lbs)	375	1½–1¾
Whole Chicken (Over 5 lbs)	375	1¾–2
Turkey (6 lbs to 8 lbs)	325	3½–4
Turkey (8 lbs to 12 lbs)	325	4–4½
Turkey (12 lbs to 16 lbs)	325	5½
Turkey (16 lbs to 20 lbs)	325	5½–7
Turkey (20 lbs to 22 lbs)	325	7–8½
Duck (3 lbs to 5 lbs)	325	1½–2

Beef and Pork Roasting Guidelines

Follow these recommendations only as a guide for times and temperatures. Times, rack position, and temperatures may vary depending on conditions and food type. For best results, always check food at minimum time.

Food	**Oven Temperature** (°Fahrenheit)	**Cooking time** (Minutes per pound)
Beef Roast (Rare)	325	20–25
Beef Roast (Medium)	325	26–30
Beef Roast (Well)	325	33–35
Rolled Roast (Rare)	325	32–36
Rolled Roast (Medium)	325	36–40
Rolled Roast (Well)	325	43–45
Fresh Whole Ham	325	22–28
Pork Loin	325	35–40
Pork Shoulder, Butt	325	40–45
Pork Picnic Shoulder	325	35–40
Mild Cured Ham Picnic, Shoulder	350	30–35

Broiling Guidelines

Follow these recommendations only as a guide for times and temperatures. Times, rack position, and temperatures may vary depending on conditions and food type. For best results, always check food at minimum time.

Food	**Thickness** (Doneness)	**Rack position** (1=Highest 5=Lowest)	**Cooking time** (Minutes)
Beef Steak	1" (med.)	3	14–16
Beef Steak	1" (well)	3	23
Beef Steak	1½" (med.)	3	23–28
Beef Steak	1½" (well)	3	33
Beef ground	(¾"–1")	4	12–17
Fish Fillets and Steaks		4	15–20
Pork Chops or Steak	1"	3	15–16
Pork Chops or Steak	1½"	3	23–28
Bacon		4	12–17
Ham Slice (pre-cooked)	½"	3	20–25
Ham Slice (pre-cooked)	1"	3	25–30

Cleaning

Part	Materials to Use	General Directions
Bake and broil, element		Do not clean bake element or broil element. Any soil will burn off when element is heated. Bake element is hinged and can be lifted to clean oven bottom.
Broiler pan and grid	Soap and a nonabrasive plastic scouring pad	Drain fat, cool pan and grid slightly. (Do not let soiled pan and grid stand in oven to cool.) Sprinkle with soap. Fill the pan with warm water. Let pan and grid stand for a few minutes. Wash or scour if necessary. Rinse and dry. The broiler pan and grid may also be cleaned in the dishwasher.
Burner bowls	Soap and water	The burner bowls can be removed for ease in cleaning. For extra dried on soil, soak the bowls in warm soapy water.
Control knobs	Mild soap and water	Pull off knobs. Wash gently but do not soak. Dry and return controls to oven, making sure to match flat area on the knob to the flat area on shaft.
Coiltop	Soap and water	Coil elements do not need to be cleaned. Any food spilled on element will burn off. **NEVER immerse elements in water.**
Inside oven door	Soap and water	Clean the outside of the door and the window area with warm soapy water. Do not clean the oven door gasket. Gasket should not be moved while cleaning. Avoid getting any cleaning materials on gasket.
Outside finish and backguard	Soap and water	Wash all glass with cloth dampened in soapy water. Rinse and polish with a dry cloth. If knobs are removed, do not allow water to run down inside surface while cleaning.
Oven interior surfaces	Soap and water	Cool before cleaning. Frequent wiping with mild soap and water prolongs time between deep cleanings. Be sure to rinse thoroughly.
Oven racks and storage drawer	Soap and water	For heavy soil, clean by hand and rinse thoroughly. Remove the drawer and racks for ease in cleaning. Be sure drawer is dry before replacing.

Problem	Check
Oven light does not work.	Check for loose bulb. Check for burned out bulb; replace with 40-watt appliance bulb.
Oven does not heat.	Confirm range is plugged in. If both oven and surface elements do not heat, check circuit breaker. Check control for proper setting.
Oven temperature is not accurate.	Store purchased oven thermometers do not measure oven temperature accurately. An accurate digital thermometer is necessary to calibrate oven. Check for blocked heat vents. Aluminum foil alters oven temperature. Change oven temperature through oven control.
Oven element cycles on and off.	This condition is normal when baking or roasting. To maintain a temperature for baking, oven cycles on and off. The temperature may vary up to 25°F higher or lower than the oven temperature set on the control.
The oven smokes the first few times it is turned on.	Minor smoking is normal first few times oven is used.
Range top is warm during use .	Normal condition.
Food cooks slowly or will not maintain constant boil.	Improper cookware causes poor cooking results. Pan bottoms must be flat. Pans should be made of heavy material and be same diameter as surface element. See “ Cooking Utensils” section.

COOKING PRODUCTS WARRANTY

(excluding wall ovens)

FULL ONE YEAR WARRANTY
LIMITED SECOND YEAR WARRANTY ON ALL PARTS
LIMITED THIRD THRU FIFTH YEAR WARRANTY ON GLASS/CERAMIC TOP, ELECTRIC SURFACE ELEMENTS, OR GAS SURFACE BURNERS.

FIRST YEAR
Caloric Sales Co. L.P. will repair or replace, including related labor and travel, any part (FOB Amana Iowa) which proves to be defective as to workmanship or materials.

SECOND YEAR
Caloric Sales Co. L.P. will provide replacement part, part only (FOB Amana Iowa), which proves defective as to workmanship or materials.

THIRD THROUGH FIFTH YEAR
Caloric Sales Co. L.P. will provide replacement glass/ceramic cooktop, electric surface elements or gas surface burners, part only (FOB Amana Iowa) which prove defective as to workmanship or materials.

OWNER'S RESPONSIBILITIES:
- Provide any defective part to an authorized Caloric Sales Co. L.P. servicer.
- Provide proof of purchase.
- Provide normal care and maintenance, including cleaning as instructed in owner's manual.
- Replace owner replaceable items where directions appear in the owner's manual.
- Make product accessible for service.
- Pay for premium service costs for service outside servicer's normal business hours.
- Pay for service calls related to product installation and customer education.

ITEMS NOT COVERED:
- Normal product maintenance and cleaning.
- Light bulbs.
- Damages which occur in shipment.
- General rebuilding or refurbishing that is not a legitimate warranty repair.
- Failures caused by:
  - Unauthorized service.
  - Grease or other material buildup due to improper cleaning or maintenance.
  - Accidental or intentional damage.
  - Connection to an improper gas or power supply.
  - Accident, misuse, abuse, fire, flood, or acts of nature.
  - Use of improper pans, containers, or accessories that cause damage to the product.

WARRANTY LIMITATIONS:
- Begins at date of original purchase.
- Product used on a commercial, rental, or leased basis are not covered by this warranty.
- Applies to product used within the United States or in Canada if product has appropriate agency listing when shipped from the factory.
- Service must be performed by an authorized Caloric Sales Co. L.P. servicer.

WARRANTY IS VOID IF:
- Serial plate is defaced.
- Product is altered by user.
- Product is not installed or used according to manufacturer's instructions.

IN NO EVENT SHALL CALORIC SALES CO. L.P. BE LIABLE FOR INCIDENTAL OR CONSEQUENTIAL DAMAGES*
*This warranty gives you specific legal rights and you may have others which vary from state to state. For example, some states do not allow the exclusion or limitation of incidental or consequential damages so this exclusion may not apply to you.

For answers to questions regarding the above or to locate an authorized Caloric Sales Co. L.P. servicer, contact:

Caloric Sales Co. L.P.
2800 220th Trail
PO Box 8901
Amana, Iowa 52204-0001
USA
1-800-843-0304 inside U.S.A.
1-319-622-5511 outside U.S.A.

Part No.36-31952301-0
Printed in U.S.A.

© 12/99 Caloric Sales Co. L.P.
Amana, Iowa 52204